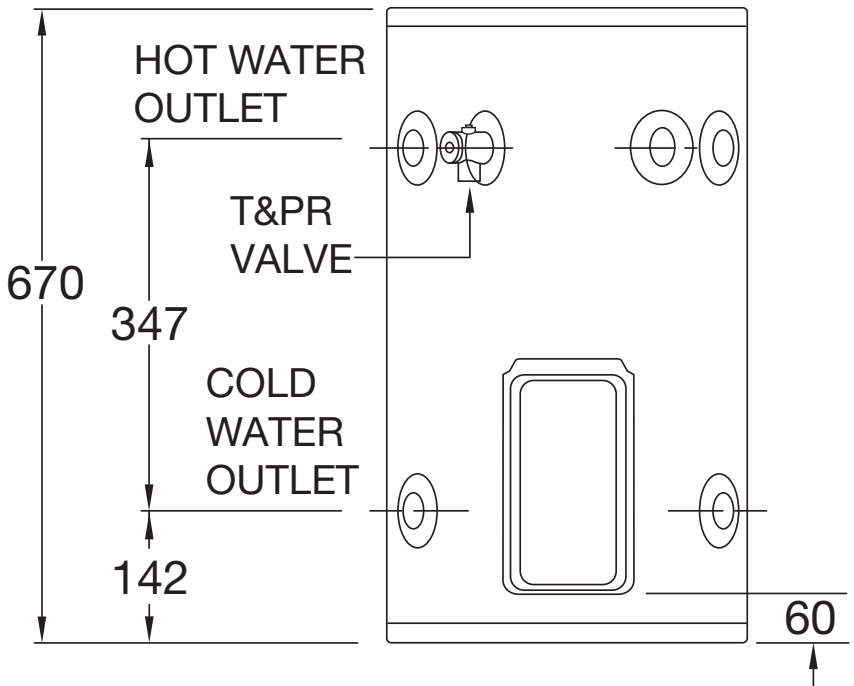
HOT WATER
OUTLET
T&PR
VALVE
670
347
COLD
WATER
OUTLET
142
60

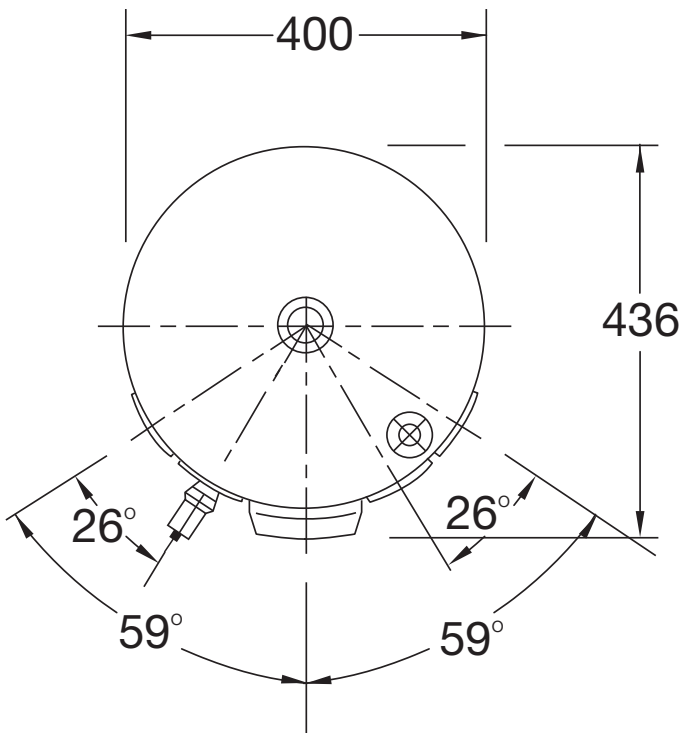
400
436
26°
26°
59°
59°